WRENCH VIRTUOSO

Automotive Services

COMPANY PROFILE

At WRENCH VIRTUOSO, we are dedicated to delivering exceptional automotive service with integrity, expertise, and a personal touch. Our mission is to create a welcoming environment where every team member is empowered to provide top-notch care for our customers and their vehicles. We strive to build lasting relationships based on trust and transparency, ensuring that every visit enhances the safety and performance of our customers' cars. Together, we are committed to fostering a culture of continuous learning and teamwork, inspiring passion for automotive excellence in both our team and the community we serve.

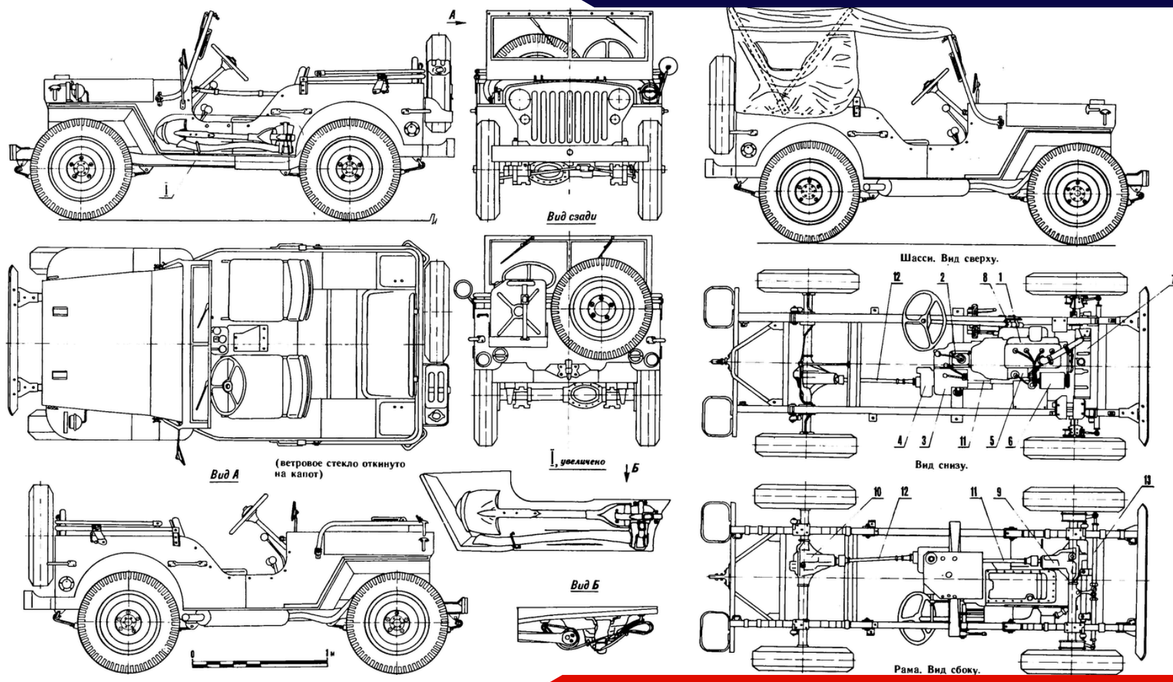

INTRODUCTION

Welcome To Our Company

Excellence in every turn, care in every journey.

Our Beginnings

We are passionate automobile enthusiasts with backgrounds in Mechanical Engineering, having worked across various sectors of the automotive service industry. Our goal is to enhance the experience beyond what you would find anywhere else.

LEARN MORE ⟶

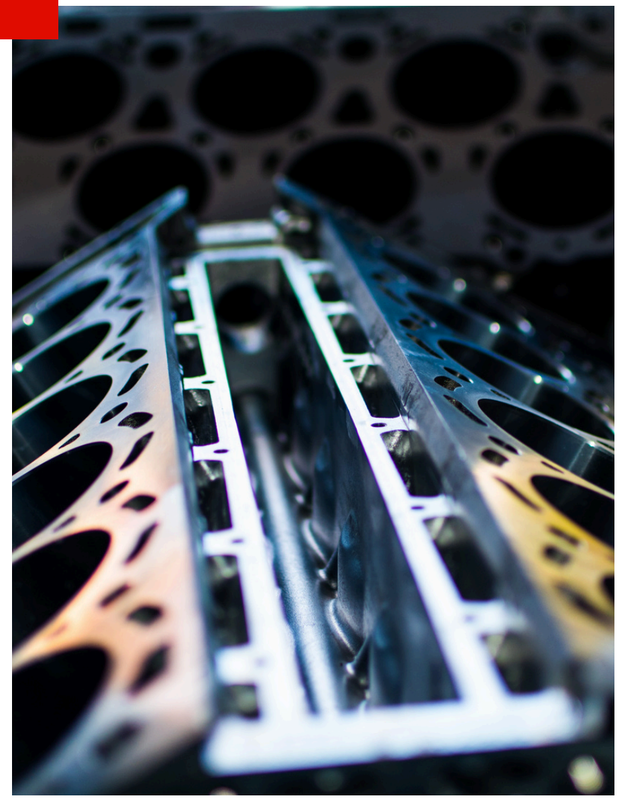



WHAT WE OFFER

Our Products & Services

We are your one-stop destination for all your automotive needs. Our services include:

- Car Servicing and repairs
- Body shop
- Air conditioning services
- Detailing
- Electrical Services and Batteries
- Wheels
- Pre owned car sales

Count on us for comprehensive automotive care!

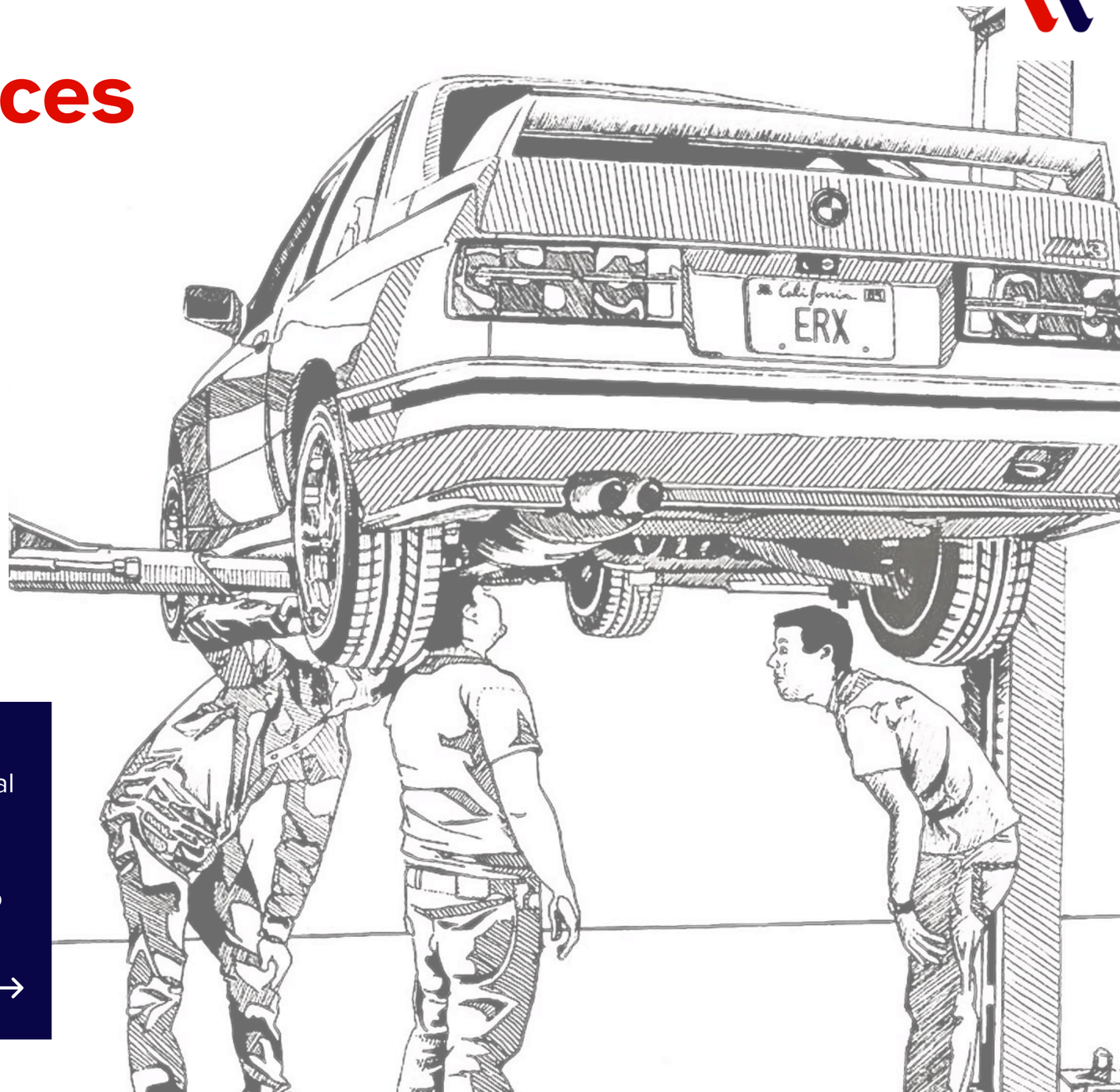

Quality Services

We strive to deliver the highest quality in spare parts and tools to ensure an exceptional service experience.

LEARN MORE →

Our Solutions

We strive to provide the optimal solution for your vehicle, prioritizing both safety and longevity while also working to accommodate your budget.

LEARN MORE →

OUR SERVICES

CAR SERVICE AND REPAIRS

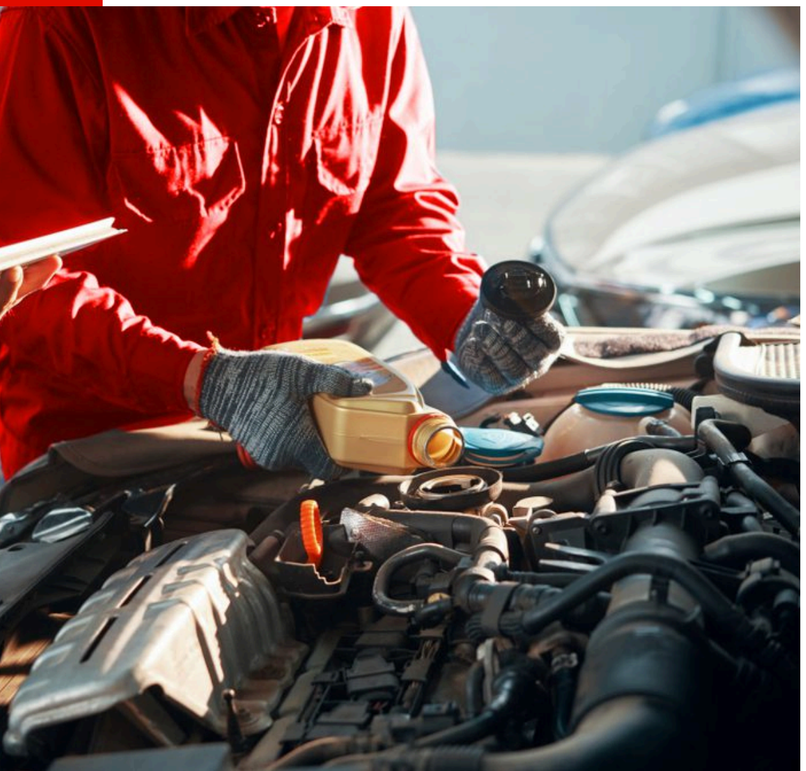

PERIODIC MAINTAINANCE SERVICE

Regular Intervals:

Periodic Maintenance Service (PMS) is organized based on either mileage or time, with varying intervals for basic and comprehensive servicing. For instance, some manufacturers recommend servicing every six months or 10,000 kilometers

Comprehensive Checks:

PMS involves an extensive examination of several vehicle components, including the engine, brakes, tires, battery, and fluids.

Preventive Maintenance:

The goal of PMS is to detect and resolve potential issues before they develop into significant problems, thereby minimizing the risk of breakdowns and expensive repairs.

Optimizing Performance:

Regular maintenance guarantees that the vehicle functions efficiently, improving fuel economy and overall performance.

Extending Lifespan:

By caring for the vehicle's components, PMS contributes to extending the vehicle's lifespan.

Safety and Reliability:

PMS ensures that the vehicle is safe to operate and dependable for transportation.

OUR OIL PARTNERS

LUBRICANTS. TECHNOLOGY. PEOPLE. FUCHS

ENEOS ENEOS MOTOR OIL

IT'S MORE THAN JUST OIL. IT'S LIQUID ENGINEERING® Castrol





MECHANICAL SYSTEMS & SERVICES

Expert Car Repair Services

Keep your vehicle running smoothly with our professional repair and maintenance services! At Wrench Virtuoso Auto Services , we specialize in diagnosing, repairing, and maintaining all major mechanical systems in your car. Trust our certified technicians to deliver top-quality service with a commitment to your satisfaction.

Our Comprehensive Repair Services

1. Engine Repair & Maintenance

- Diagnostic Testing: Pinpoint engine issues with advanced diagnostic tools.
- Tune-Ups: Optimize performance with spark plug, filter, and fluid replacements.
- Overhaul & Rebuild: Restore engine power with complete rebuilds or repairs.
- Timing Belt/Chain Replacement: Prevent costly damage with timely replacements.
- Oil Changes: Extend engine life with regular oil and filter changes.

MECHANICAL SYSTEMS & SERVICES

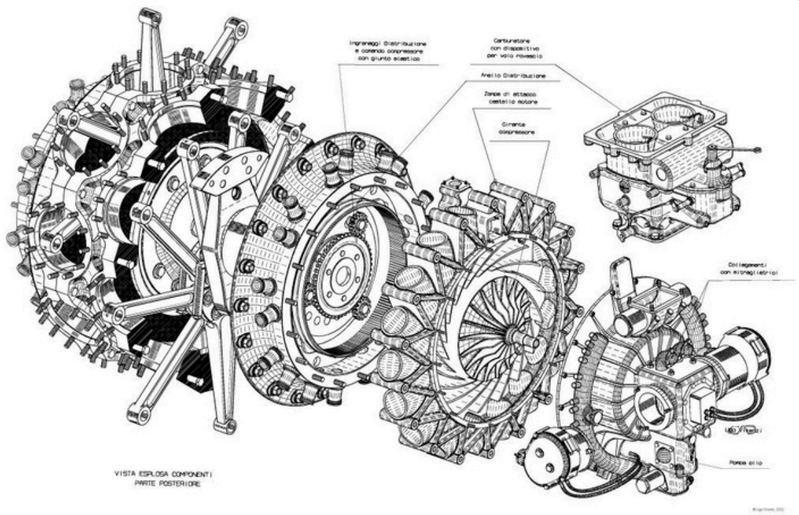

Transmission Services

- Fluid Flush & Replacement: Maintain smooth shifting with clean transmission fluid.
- Clutch Repair/Replacement: Restore manual transmission performance.
- Automatic Transmission Repair: Fix slipping, grinding, or shifting issues.
- Transmission Rebuild: Comprehensive rebuilds for long-lasting performance.

Brake System Services

- Brake Pad Replacement: Ensure safe stopping with high-quality pads.
- Rotor Resurfacing/Replacement: Smooth out warped or worn rotors.
- Brake Fluid Flush: Maintain hydraulic performance with fresh fluid.
- Caliper & Line Repair: Fix sticking calipers or leaking lines for reliable braking.

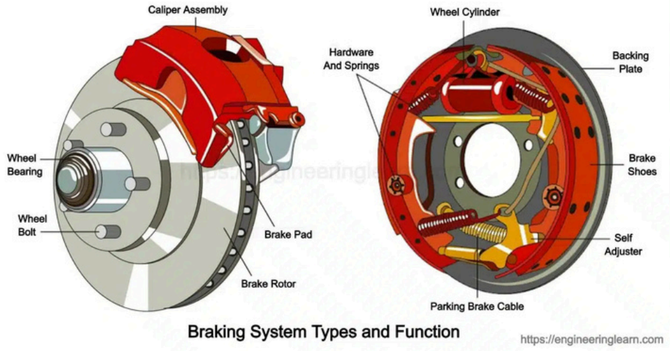

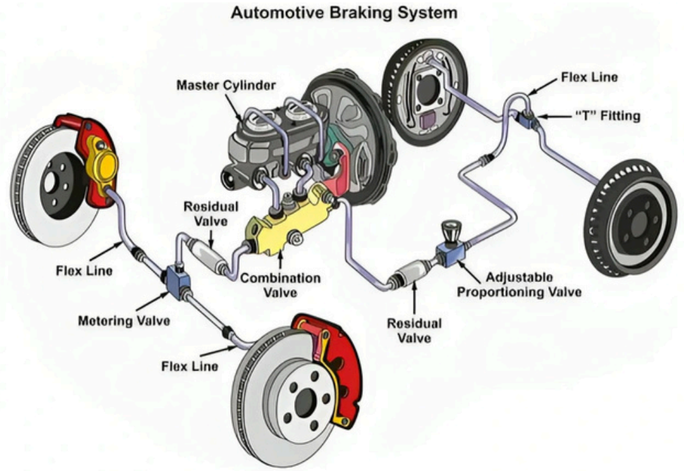

MECHANICAL SYSTEMS & SERVICES

Suspension & Steering

- Shock & Strut Replacement: Improve ride comfort and handling.
- Alignment Services: Correct wheel alignment for even tire wear and control.
- Tie Rod & Ball Joint Repair: Restore precise steering and suspension stability.
- Power Steering Service: Fix leaks and ensure smooth steering operation.

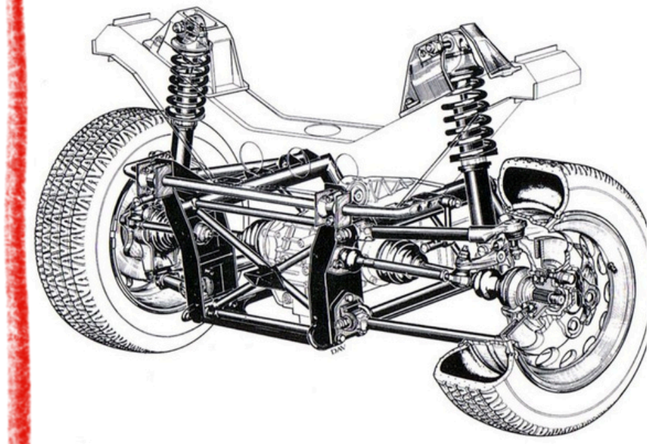

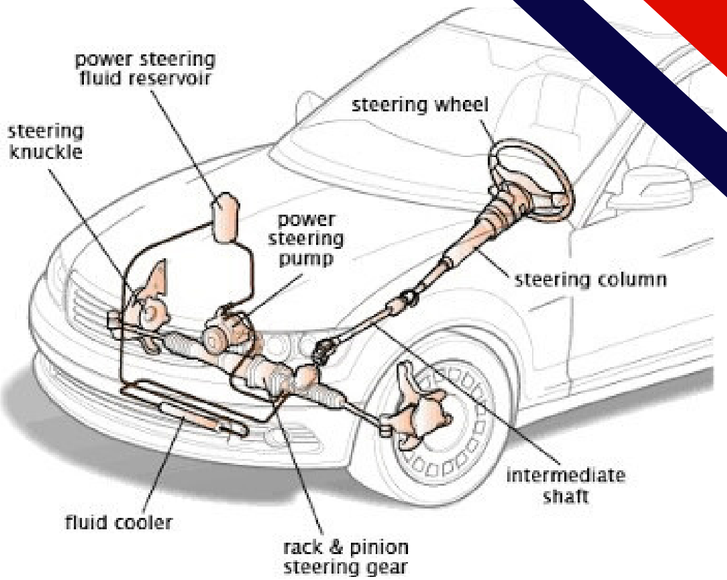

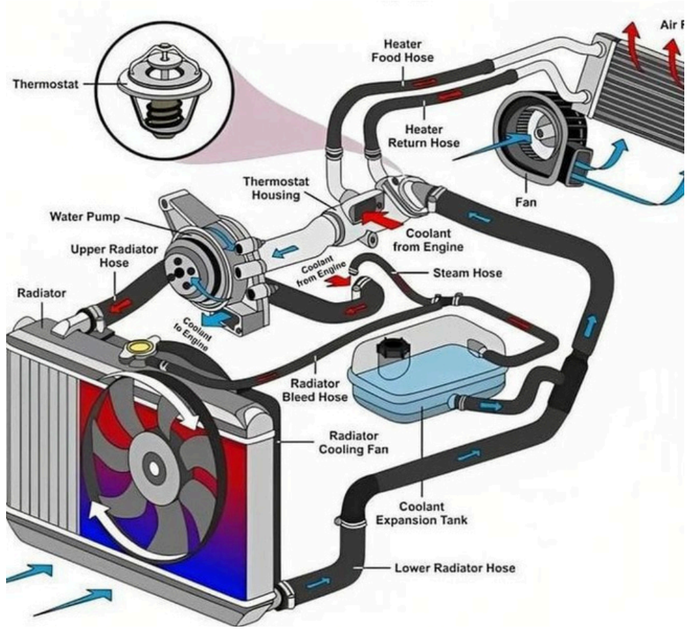

Cooling System Maintenance

- Radiator Repair/Flush: Prevent overheating with clean, efficient cooling.
- Water Pump Replacement: Ensure proper coolant circulation.
- Thermostat Replacement: Maintain optimal engine temperature.
- Coolant Leak Repair: Fix hoses, seals, or gaskets to prevent leaks.

MECHANICAL SYSTEMS & SERVICES

Exhaust System Services

- Muffler Repair/Replacement: Reduce noise and improve exhaust flow.
- Catalytic Converter Service: Ensure emissions compliance and performance.
- Exhaust Manifold Repair: Fix cracks or leaks for efficient operation.
- Oxygen Sensor Replacement: Optimize fuel efficiency and emissions.

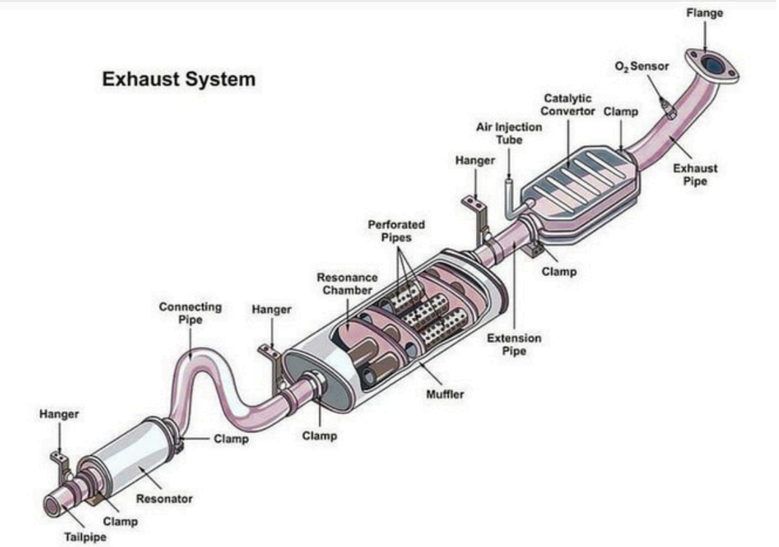

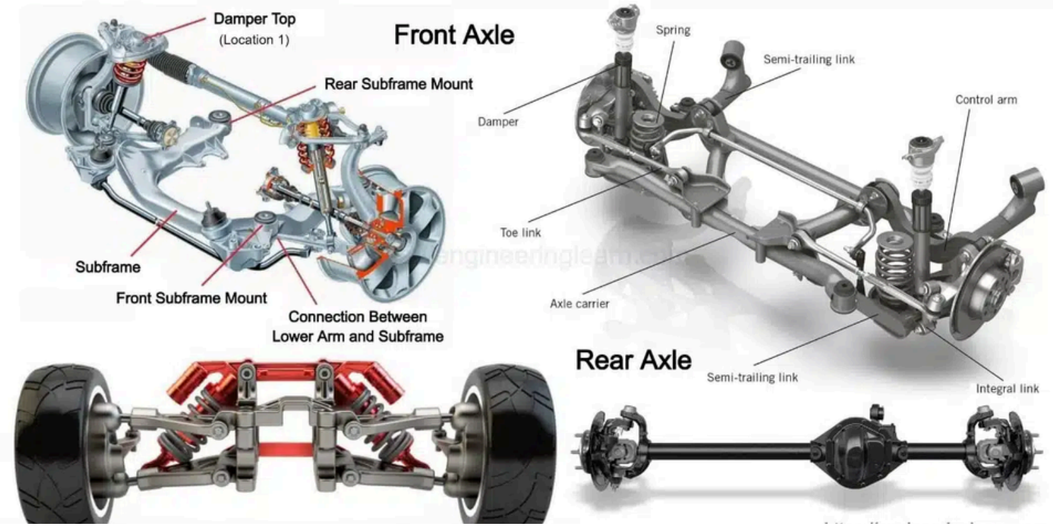

Drivetrain & Axle Services

- Differential Repair: Maintain smooth power delivery to the wheels.
- CV Joint/Axle Replacement: Fix clicking or vibration during turns.
- Driveshaft Repair: Ensure smooth power transfer to the wheels.

MECHANICAL SYSTEMS & SERVICES

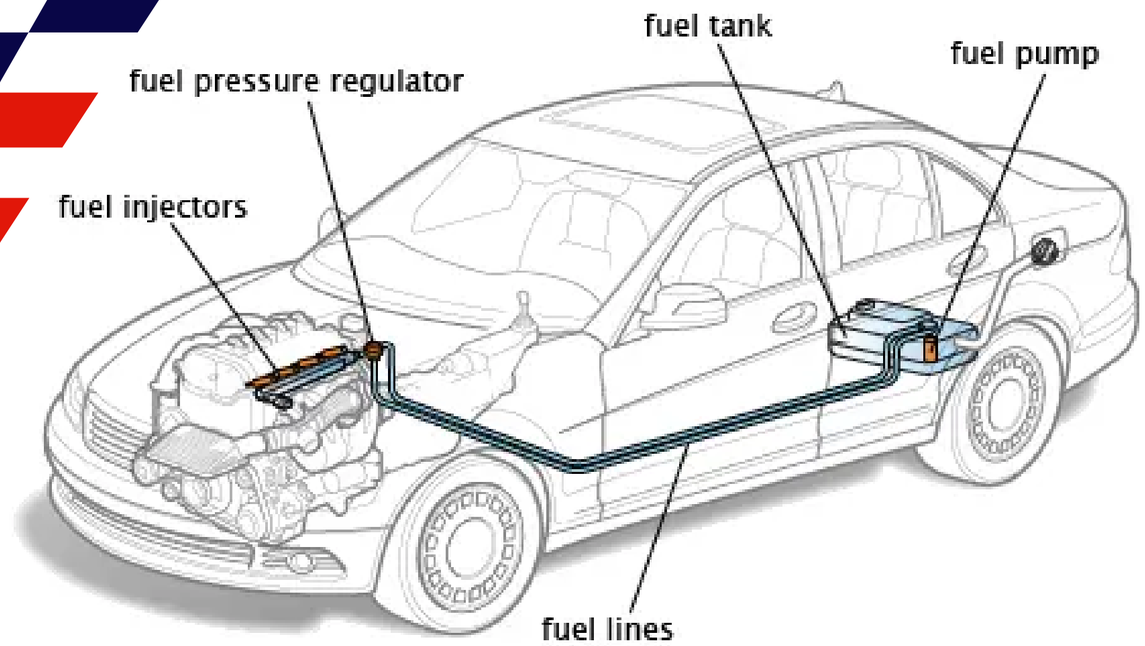

Fuel System Repairs

- **Fuel Pump Replacement: Restore proper fuel delivery to the engine.**
- **Fuel Injector Cleaning/Replacement: Improve combustion and efficiency.**
- **Fuel Line Repair: Fix leaks or clogs for consistent fuel flow.**
- **Fuel Filter Replacement: Keep contaminants out of your engine.**

Tyre & Wheel Services

- **Tyre Rotation & Balancing: Extend tire life and improve ride quality.**
- **Wheel Bearing Replacement: Eliminate noise and ensure smooth wheel rotation.**
- **Tire Repair & Replacement: Patch punctures or install new tires for safety.**

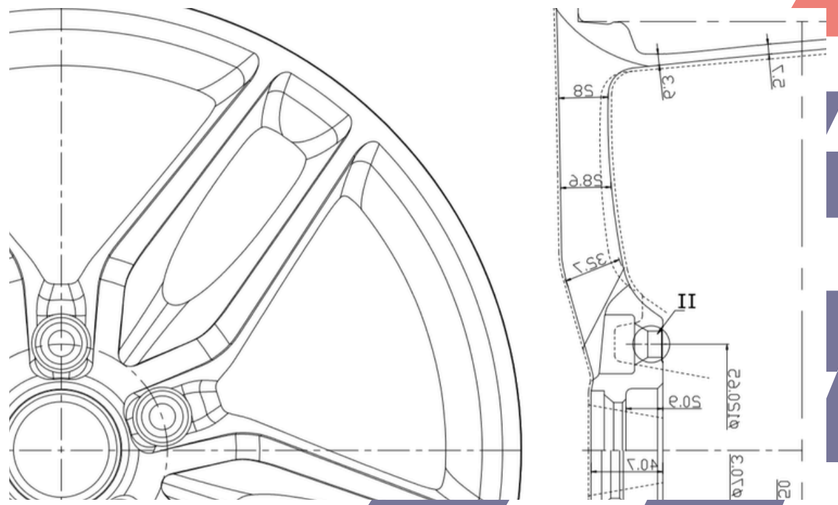

ELECTRICAL SYSTEMS

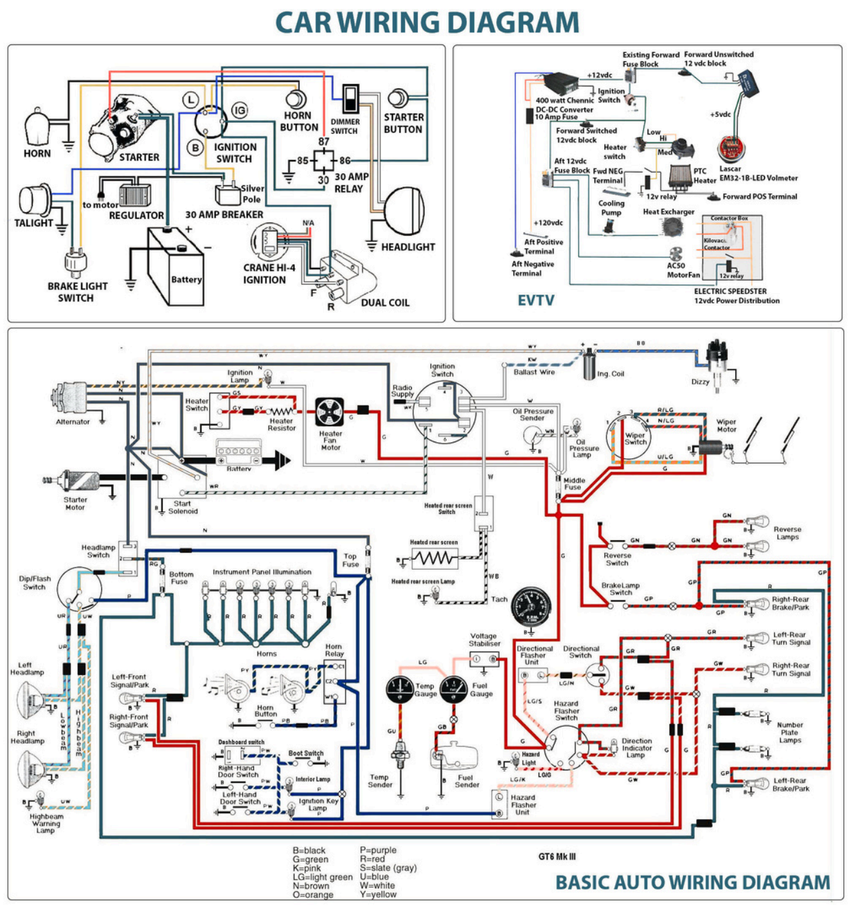

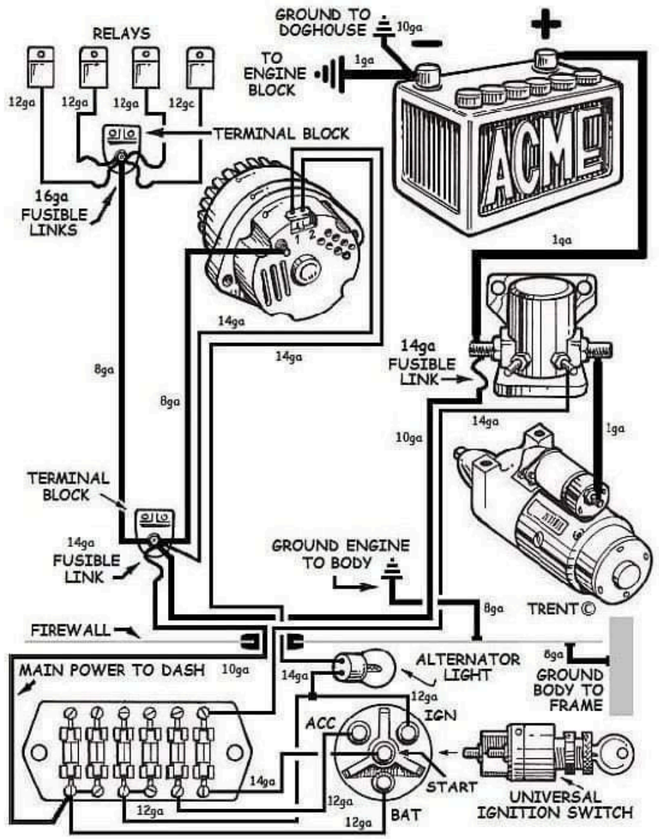

Electrical System Services

- **Battery Testing & Replacement: Ensure reliable starts with a strong battery.**
- **Alternator Repair: Keep your electrical system powered and charging.**
- **Starter Motor Replacement: Fix starting issues for dependable performance.**
- **Wiring & Sensor Repairs: Troubleshoot and repair electrical faults.**
- **Fuses & Relays**
- **Control units and Computers (ECU) : Troubleshoot coding errors and electrical malfunctions**

BODY SHOP & DETAILING



"Revive Your Ride: Expert Body Shop & Premium Detailing Services!"

Our Services

Auto Body Repair & Painting

- **Collision Repair:** Expert restoration of damaged fenders, frames, and doors to pre-accident condition.
- **Paintless Dent Removal**: Remove dings and minor dents without compromising your vehicle's original finish.
- **Full-Body Painting**: High-quality paints and advanced techniques for a flawless, factory-like finish.
- **Insurance Claims Assistance:** Hassle-free guidance through the insurance process to save you time and money.



Premium Detailing

- **Exterior Detailing**: Multi-stage washing, waxing, and polishing for a mirror-like shine.
- **Interior Detailing**: Deep cleaning, shampooing, and conditioning of upholstery, carpets, and dashboards.
- **Ceramic & Graphene Coatings**: Long-lasting protection to enhance shine and protect against scratches and UV damage.
- **Paint Protection Film (PPF)**: Self-healing film to safeguard your vehicle's paint from chips and scratches.
- **Headlight Restoration**: Restore cloudy or yellowed headlights to improve visibility and aesthetics.
- **Underbody Anti-Rust Coating**: Protect your vehicle from corrosion and wear.

OUR ACHIEVEMENTS

Over the past 5 years, our auto repair services brand has reached remarkable milestones, reflecting our commitment to quality and customer satisfaction

7,000+

Car Services: Successfully serviced over 7,000 vehicles, ensuring top-notch performance and safety.

5,000+

Happy Customers: Built a loyal community of over 5,000 satisfied clients who trust us with their vehicles.

3,000+

Painting Jobs: Delivered over 3,000 flawless paint jobs, enhancing the look and value of countless cars.

10,000+

Detailing Services: Provided over 10,000 meticulous detailing services, leaving vehicles spotless and pristine.

90%+

Customer Retention: Achieved a customer retention rate of over 90%, a testament to our consistent quality and service.

4.8+

Star Google Reviews: Earned an impressive average rating of 4.8+ stars on Google Reviews, showcasing our dedication to excellence.

We’re proud of these accomplishments and remain committed to keeping your vehicles in top condition!

OUR WORK FLOW

Customer Intake

- Customer arrives (walk-in, appointment, or tow-in)
- Collect customer and vehicle information
- Discuss issues or required maintenance with customer

Vehicle Inspection & Diagnostics

- Technician performs initial inspection and diagnostics
- Document findings and identify specific problems
- Prepare a detailed inspection report

Estimate Preparation

- Create an itemized estimate of parts, labor, and costs
- Review estimate with customer
- Assist with insurance documentation if needed

Customer Approval

- Obtain verbal or written authorization for repairs
- Clarify scope, pricing, and timeline
- Schedule repair time

Parts Management

- Order replacement parts if not in stock
- Validate parts list, update inventory
- Confirm delivery schedule for parts

Repair & Service Execution

- Assign vehicle to a technician
- Perform repairs and necessary maintenance
- Maintain communication with customer on progress

Quality Control & Testing

- Perform quality checks and test repairs
- Reassemble vehicle as needed
- Final inspections and road tests for safety

Detailing & Cleaning

- Clean vehicle interior and exterior
- Remove repair-related debris or marks

Customer Handover

- Review completed work with customer
- Process billing, payments, and paperwork
- Return vehicle to customer

Follow-Up

- Conduct follow-up call or message for feedback
- Address any post-service concerns
- Document service history for future reference

Contact Us

"Contact us today for expert auto repair you can trust!"

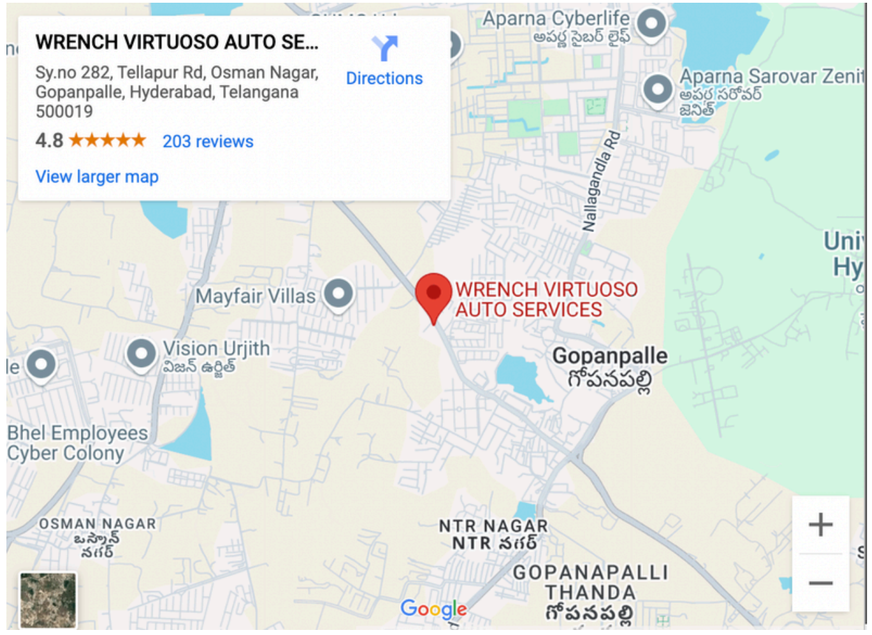

Phone Number
+91 8106602254
+91 8106602263

Office Hours
Monday-Saturday
08.00-20.00

More Information
www.wrenchvirtuoso.com

Location
Sy.no 282, Tellapur Rd, Osman Nagar, Gopanpalle, Hyderabad, Telangana 500019

BRANDS WE SERVE

OUR PARTNER BRANDS BEYOND OEMS

THANK YOU

WRENCH VIRTUOSO
Automotive Services

“GEAR UP!

MOTO SERVICES ARRIVING SOON”

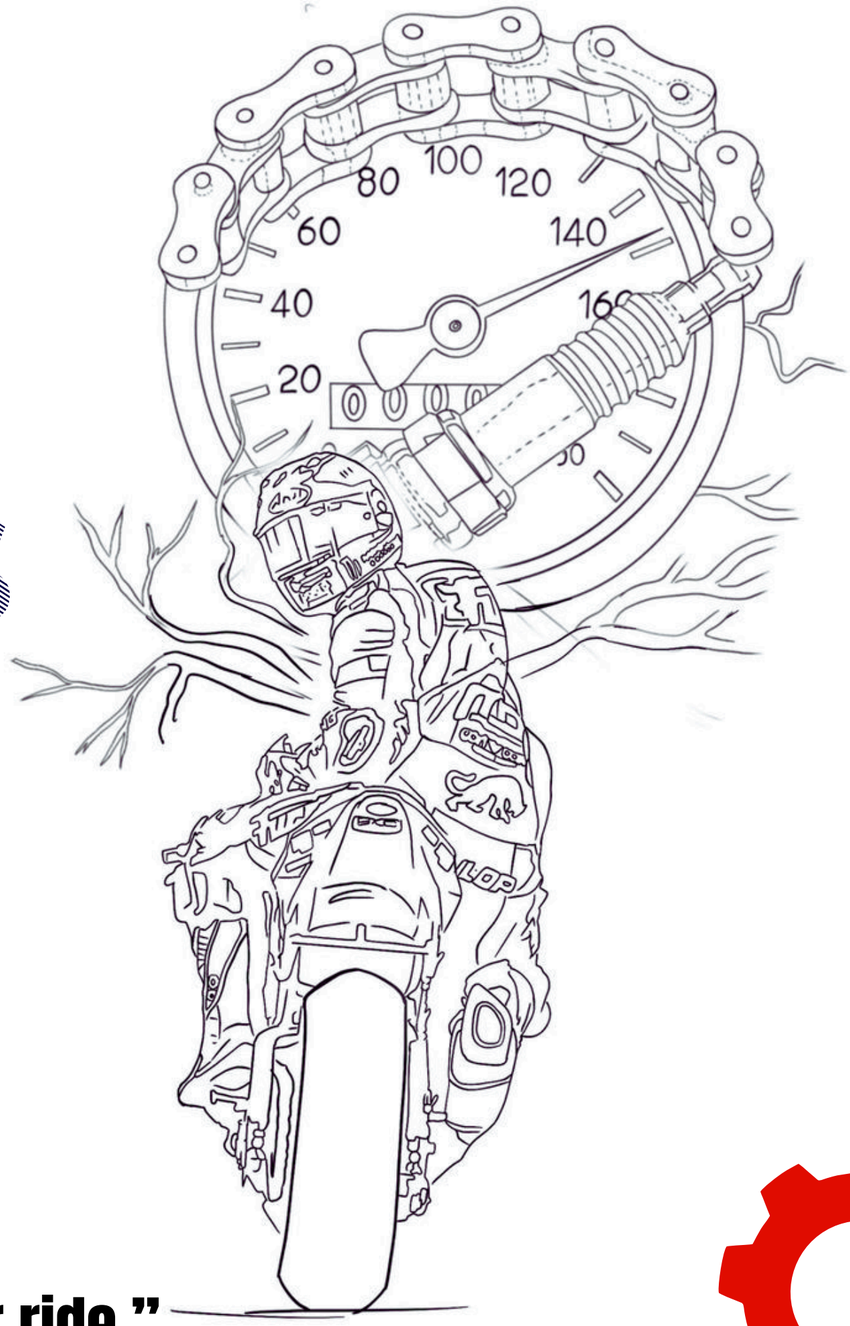

“Stay tuned for expert care for your ride.”